Stresses and Loads in a Hot-Tap Tie-in Line

Mohammed A Ansari, S Ebenezer Stanley, REG (JEC)

Introduction: Hot-Tapping is a method of taking a tie-in from an existing system that is in service without interrupting the flow [1]. Here the new line is getting tied-in to a hot line that is displaced due to thermal growth. Hence it is required to analyze the non-simultaneous displacement scenario of the new and existing line. The support load, stresses and special support design are affected by it. The subsequent part of the article explains the method employed to achieve the simulation of such a scenario [2].

System Description: The system consist of MP Steam Generator ME-RHZ358-S14A/B and its tube side outlet line (PA471, 20"NPS, Sch 60), operating at 197 deg.C [Figure 1]. A new MP Steam generator is required to be tied-in to this system with the help of Hot-Tap procedure [Figure 2]. The operating temperature of the tube side outlet (PA844, 16"NPS, Sch XS) of the new generator is 215 deg. C.

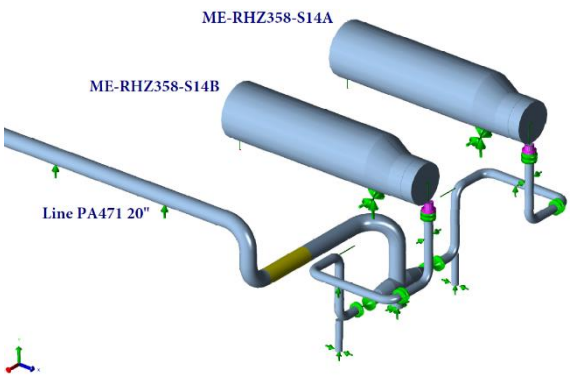

Figure 1: Existing System

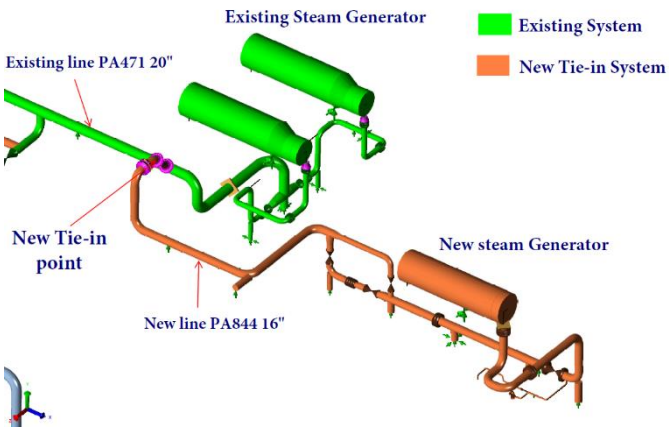

Figure 2: System with new Tie-In

Analysis Procedure: The analysis is carried out in the following steps

Step 1: Model the existing and new system both connected. New line is modelled without any restraint including the new equipment support. Define a temperature only (T1, without W or P1) load case with existing line at operating temperature and new line at ambient temperature. Note the displacements at points of interest in New line (Support Points). This will give the displacements in new line due to existing line thermal growth.

Step 2: Now add the restraints in the new line at supports points. The restraints are to be modeled with the nodal displacements (D1) obtained in step 1 with the help of connecting Node on Restraints.

Step 3: Add the displacement D1 to the Operating, Design and Shutdown (ambient) load case and also define its corresponding expansion load cases. Read the results that account for non-simultaneous movement.

Procedure applied in the current model:

In step 1, the model [Figure 3] is simulated for pure thermal case (with new line cold and existing line hot). The restraints are not modeled in the new line. Displacements at various node points of new line are obtained. The displacement is tabulated in Table 1.

In step 2, the restraints are added to the new line each with a connecting node with corresponding displacement value given in Table 1. Displacement is important only in the direction the restraint is active.

In step 3, Operating / Design / Shutdown load cases are defined with support displacement included. The loads and stresses are obtained. Table 2 gives the comparison of loads.

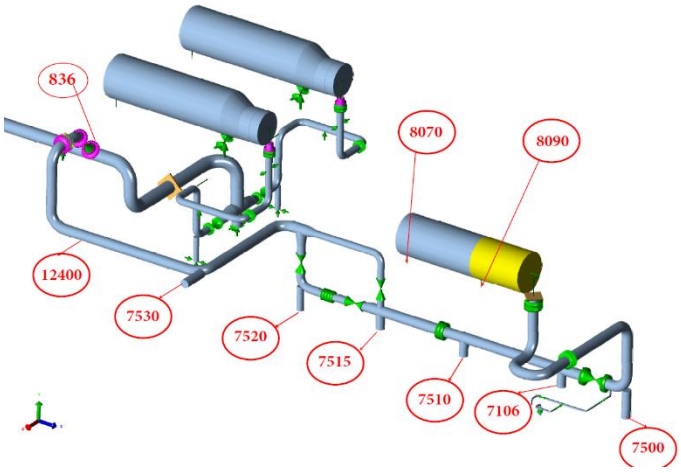

Figure 3: Displacement at restraint nodes of new line

As seen in the Table 2, the loads at NP 12400 increases by 17000N (35%).This means that the line will require to retrace back vertically when the whole system (along with the new line in operation) is down to ambient temperature, but the restraint placed at 12400 Node point will prevent that and this will cause greater load on the restraint and stresses in the piping. The stresses are compared in Table 3 for node point 836 on header where the branch connection is defined.

Table 1: Displacement values at restraint nodes

(DX – in N/S, DY – in Vertical, DZ- in E/W)

NODE	DX (mm)	DY (mm)	DZ (mm)	Restraint Type Planned
12400	18.918	**17.244**	19.662	Rest
7530	17.296	-2.888	27.771	Rest
7520	13.667	-12.214	31.946	Rest
7515	14.423	-27.806	37.941	Rest
7510	14.312	-44.707	44.57	Tri-axial
7106	14.408	-64.485	52.296	Rest
7500	13.285	-76.905	57.315	Rest
7048	24.622	-75.662	55.217	Rest,Guide
8090	31.674	-57.398	47.069	Eqpt.Sliding
8070	31.679	-42.327	41.172	Eqpt. Fixed

Table 2: Load Comparison

Method 1:- Hot-Tap analysis – Non-simultaneously displaced,

Method 2:- Normal Analysis

Load Cases	NODE	N/S (N)	Vertical (N)	E/W (N)
Method 1 (W+T1+P1+D1)	12400		**-66145**	
Method 2 (W+T1+P1)		6641	**-48742**	13028
Method 1 (W+T1+P1+D1)	7530		-5475	
Method 2 (W+T1+P1)		3075	-10623	836
Method 1 (W+T1+P1+D1)	7520		-29696	
Method 2 (W+T1+P1)		-8696	-31424	2977
Method 1 (W+T1+P1+D1)	7515		-36681	
Method 2 (W+T1+P1)			-29942	

(W-Weight; T1–Temp; P1–Pressure; D1- Displacement)

Table 3: Stress Comparison

Node	Normal Exp. Stresses (N/ sq. mm)	Displaced Restraint Exp. Stresses (N/sq. mm)
836	83	95

Conclusion:

This method simulates the effect of non-simultaneous movement of the operating line and new hot tap tie-in line. The simulation results in effective compliance of code requirements, appropriate load for the structural design and specification of the special support (spring load / set point) if any.

References:

[1] SHELL DEP Specification, February 2016, 'HOT-TAPPING' ON PIPELINES, PIPING AND EQUIPMENT, DEP 31.38.60.10-Gen.

[2] Luff, John C. (1996). A Technique for the Analysis of Non Simultaneously Thermally Displaced Piping Systems (Hot Tapping).*COADE Mechanical Engineering News,* October 1996, pp. 13-16.